# DC generator

# Dc generator conversion

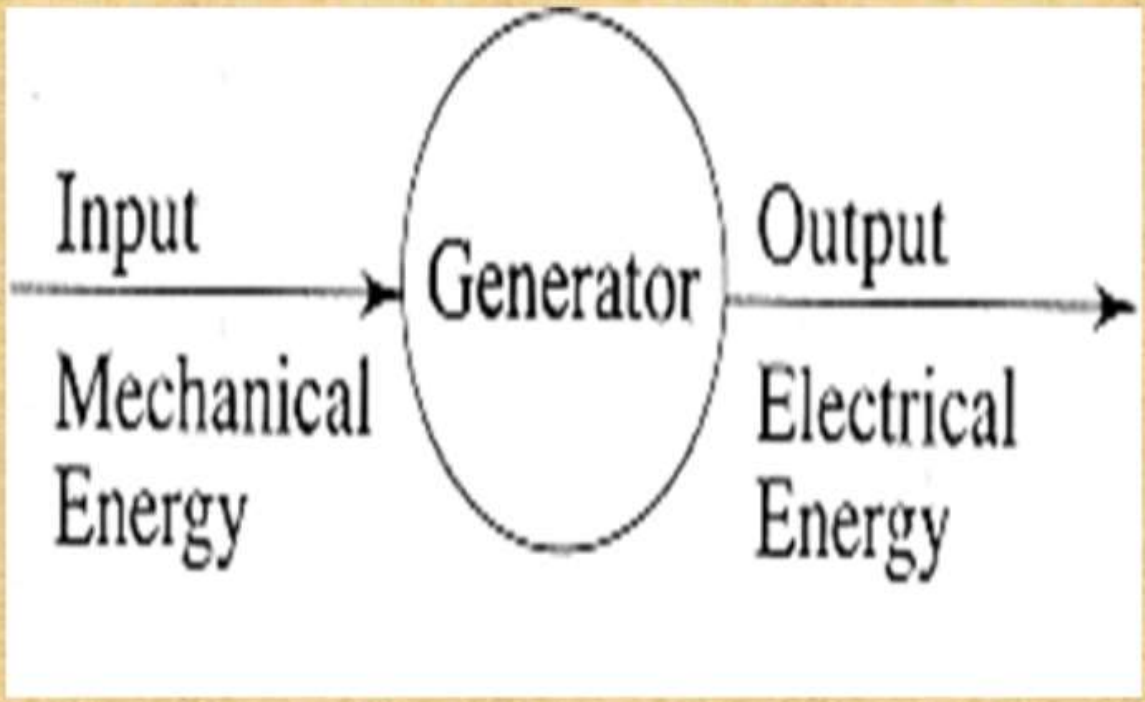

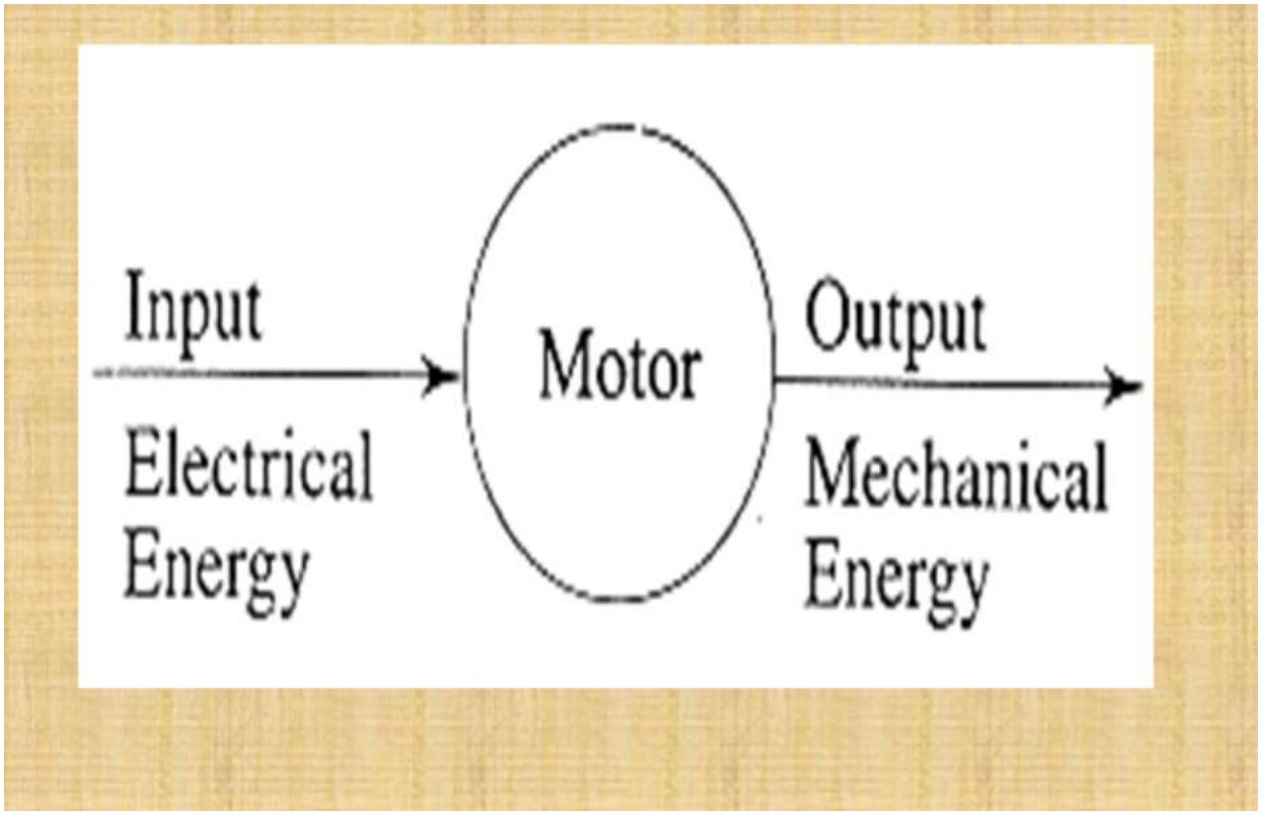
Input
Electrical
Energy
Motor
Output
Mechanical
Energy

# D.C. GENERATORS PRINCIPLE OF OPERATION

DC generator converts mechanical energy into electrical energy. when a conductor move in a magnetic field in such a way conductors cuts across a magnetic flux of lines and e.m.f. produces in a generator and it is defined by faradays law of electromagnetic induction e.m.f. causes current to flow if the conductor circuit is closed.

# Faradays laws

**First Law :**

Whenever the magnetic flux linked with a circuit changes, an e.m.f. is always induced in it.

or

Whenever a conductor cuts magnetic flux, an e.m.f. is induced in that conductor.

**Second Law :**

The magnitude of the induced e.m.f. is equal to the rate of change of flux linkages.

## Lenz's Law

"The induced currents in a conductor are in such a direction as to oppose the change in magnetic field that produces them.."

OR

"The direction of induced E.M.F in a coil (conductor) is such that it opposes the cause of producing it.."

# Fleming's Right Hand Rule

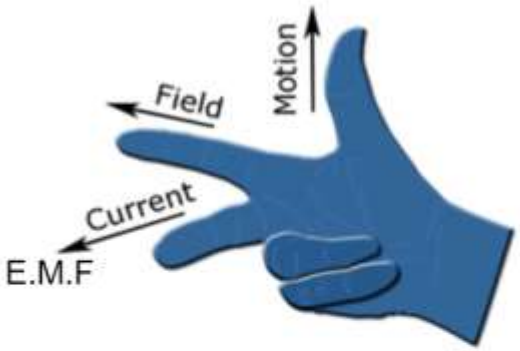


- The Thumb represents the direction of Motion of the conductor.
- The First finger (four finger) represents Field.
- The Second finger (Middle finger) represents Current

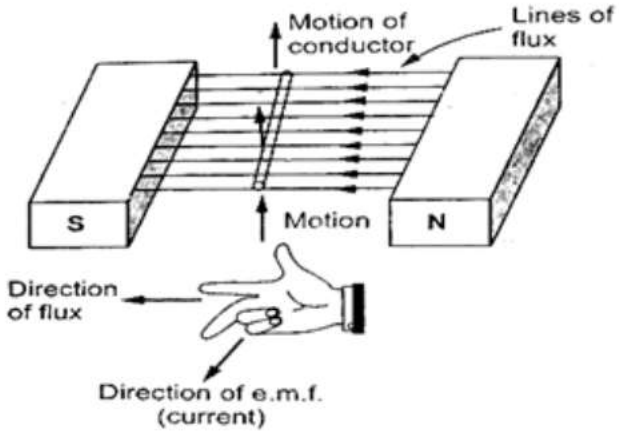
Motion of conductor
Lines of flux
S
N
Motion
Direction of flux
Direction of e.m.f. (current)

## The following are the basic requirements to be satisfied for generation of E.M.F

1.A uniform Magnetic field

2.A System of conductors

3.Relative motion between the magnetic field and conductors

- Magnetic field :-
  Permanent Magnet
  (or)
  Electro Magnet (practical)
- Conductor :- Copper (or) Aluminum bars placed in slots cut around the periphery of cylindrical rotor
- Relative motion:-
  By Prime Mover
  Turbine
  I.C Engine (Internal combustion)

# Simple loop generator

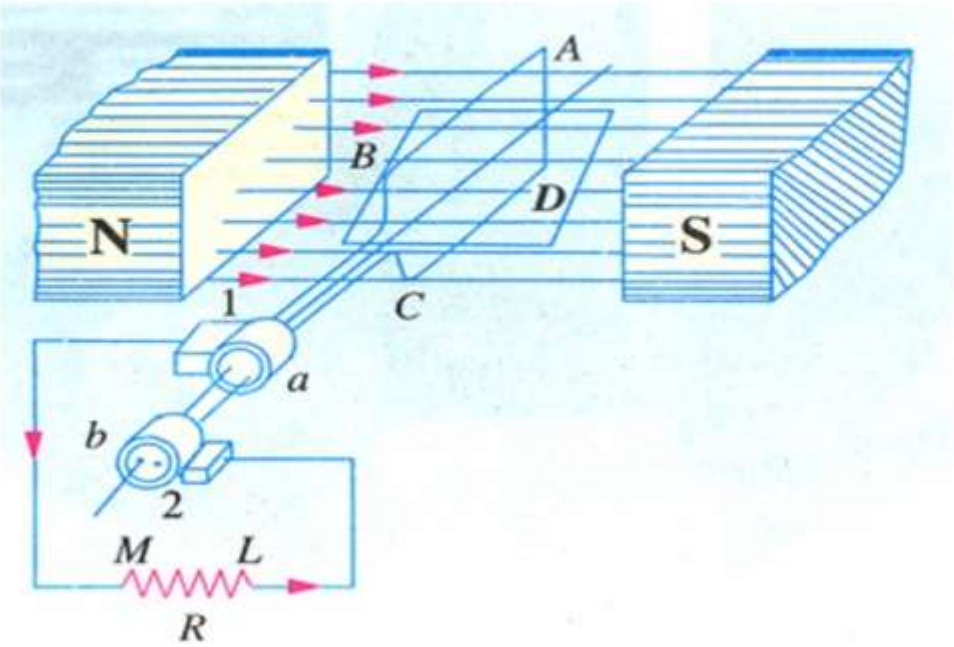

# Basic Generator

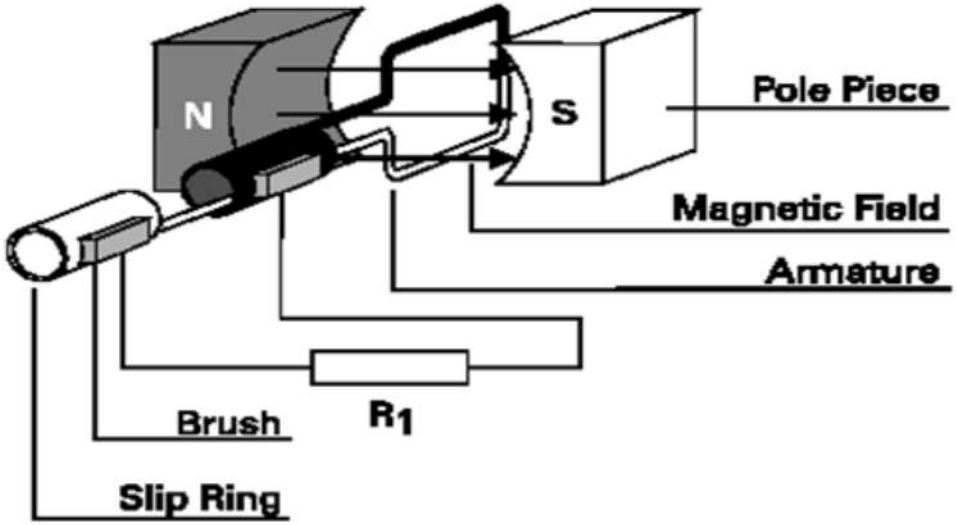

# Generators

**Basic generator**

A basic generator consists of a magnetic field, an armature, slip rings, brushes and a resistive load. The magnetic field is usually an electromagnet. An armature is any number of conductive wires wound in loops which rotates through the magnetic field. For simplicity, one loop is shown. When a conductor is moved through a magnetic field, a voltage is induced in the conductor. As the armature rotates through the magnetic field, a voltage is generated in the armature which causes current to flow. Slip rings are attached to the armature and rotate with it. Carbon brushes ride against the slip rings to conduct current from the armature to a resistive load.

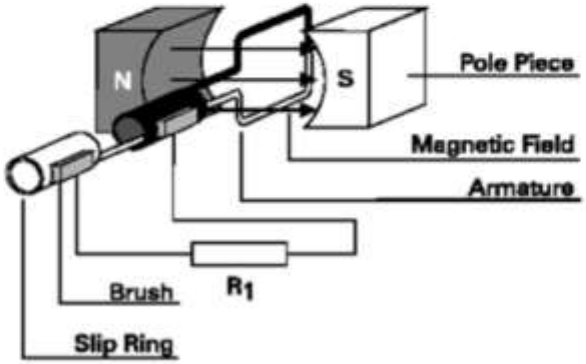

**Basic generator operation**

An armature rotates through the magnetic field. At an initial position of zero degrees, the armature conductors are moving parallel to the magnetic field and not cutting through any magnetic lines of flux. No voltage is induced.

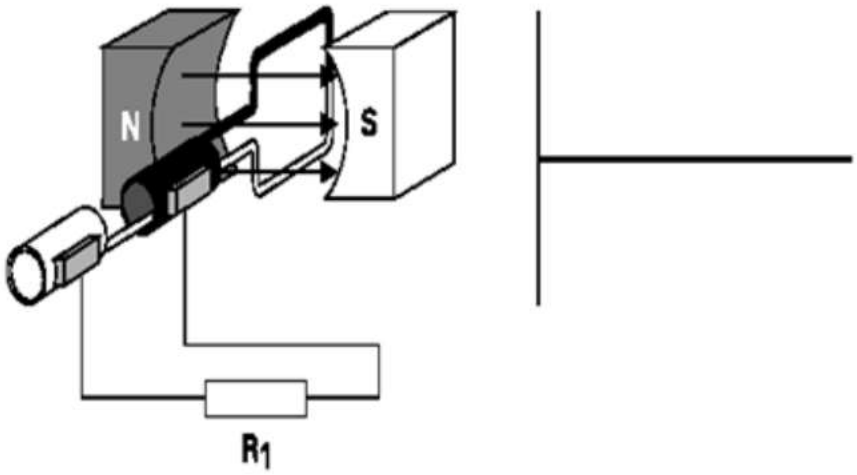

**Generator operation from zero to 90 degrees**

The armature rotates from zero to 90 degrees. The conductors cut through more and more lines of flux, building up to a maximum induced voltage in the positive direction.

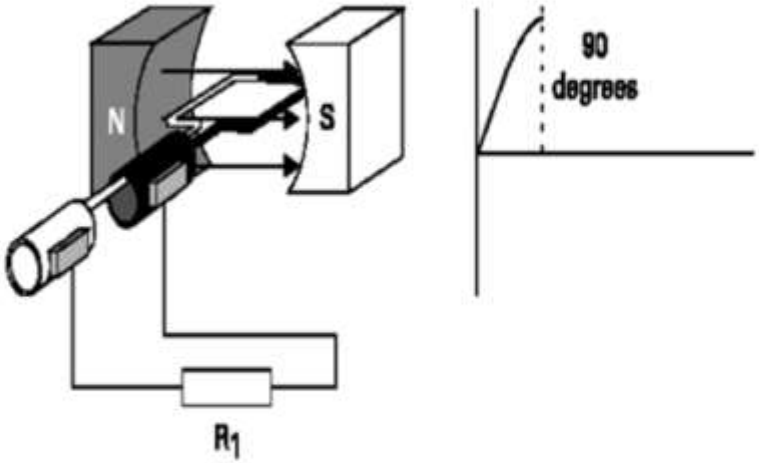

**Generator operation from 90 to 180 degrees**

The armature continues to rotate from 90 to 180 degrees, cutting less lines of flux. The induced voltage decreases from a maximum positive value to zero.

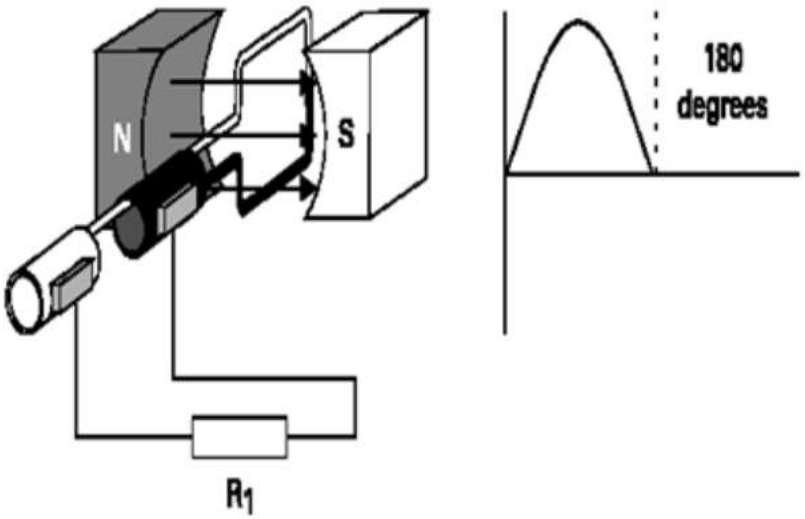

**Generator operation from 180 to 270 degrees**

The armature continues to rotate from 180 degrees to 270 degrees. The conductors cut more and more lines of flux, but in the opposite direction. Voltage is induced in the negative direction building up to a maximum at 270 degrees.

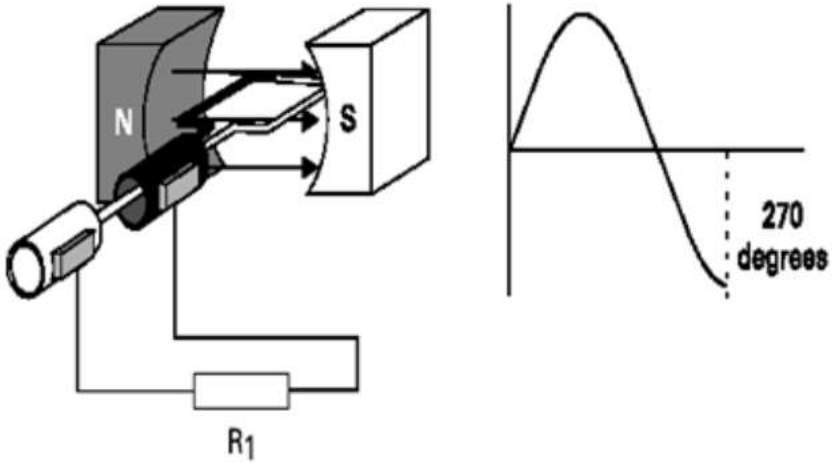

**Generator operation from 270 to 360 degrees**

The armature continues to rotate from 270 to 360 degrees. Induced voltage decreases from a maximum negative value to zero. This completes one cycle. The armature will continue to rotate at a constant speed. The cycle will continuously repeat as long as the armature rotates.

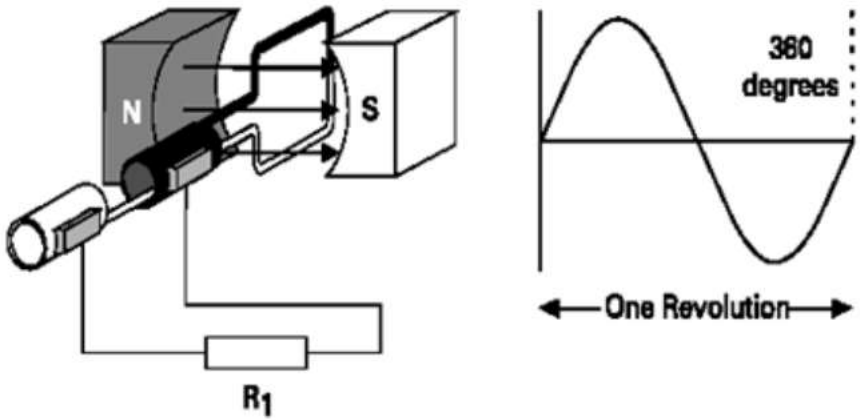

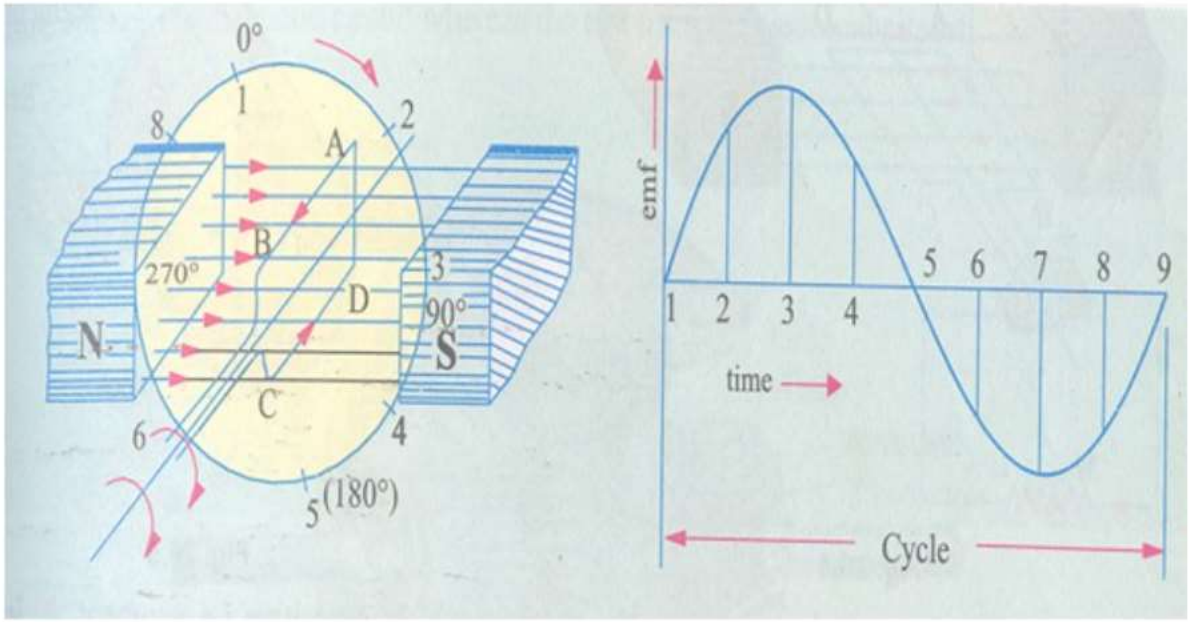
0°
1
2
8
A
B
270°
3
D
90°
N
S
C
6
4
5 (180°)
emf
5 6 7 8 9
1 2 3 4
time
Cycle

# applications

- Applications:

The series DC generator is used in arc lamps for lighting, stable current generator and booster.

DC generators are used to reimburse the voltage drop within Feeders.

DC generators are used to provide a power supply for hostels, lodges, offices, etc.

# TRANSFORMER

Transformer :-

The transformer is a static device which transfers electrical power from one circuit to another circuit, at constant frequency.

→ The transformer is power constant device

→ The transformer is constant frequency device

→ It can be used for different voltage & current changing values of A.C Supply

→ It is used in different stages of electrical systems as generation, transmission, distribution and utilization.

# Construction of Transformer

The essential components of the transformer are

1. Magnetic core
2. Two windings, namely primary and secondary windings
3. A time varying magnetic flux.

The constructional diagram of single-phase transformer as shown in below, it having different components as

1. Core
2. Limb
3. Yoke ~~or~~ Tank
4. Windings
5. Conservator Tank.
6. Cooling medium
7. Breather
8. Explosion vent
9. Buchholz relay
10. Bushings.
11. Transformer oil.

# Construction of Transformer

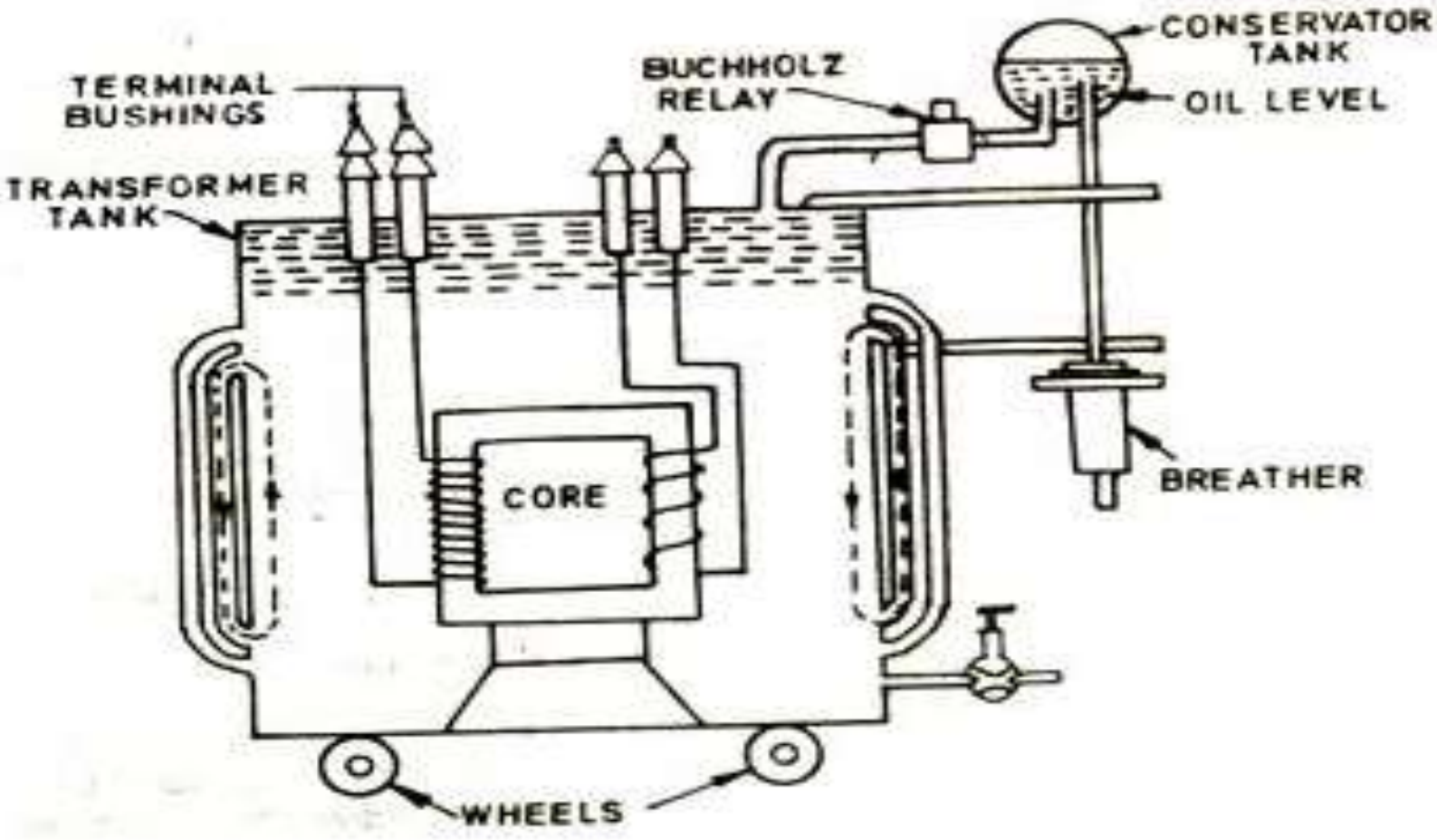

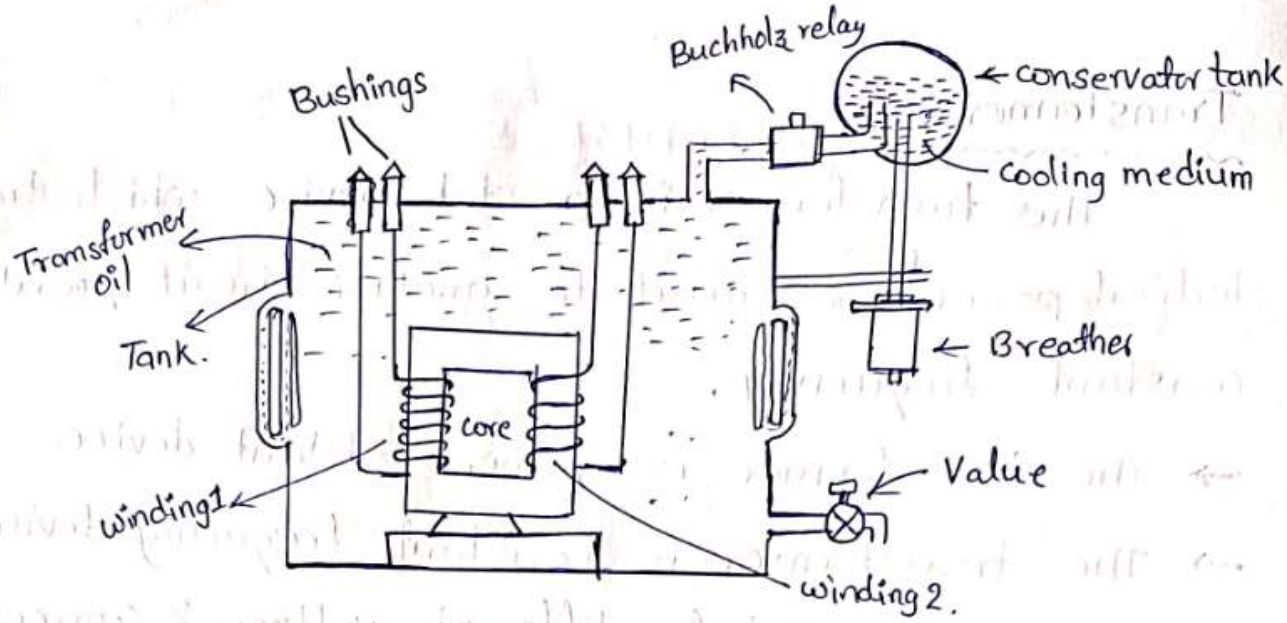


constructional diagram of Single-phase Transformer

① Transformer core :- The main function of transformer core which gives accomidation for windings transformer. It may be reactangular or square, having limbs. It is made up of Cast iron. It is two types

(a) core type

(b) Shell type

(a) core type transformer:- In this transformer rectangular frame laminations are formed to build the core.

→ It has single magnetic circuit

→ In this transformers windings are surrounded by limbs of core.

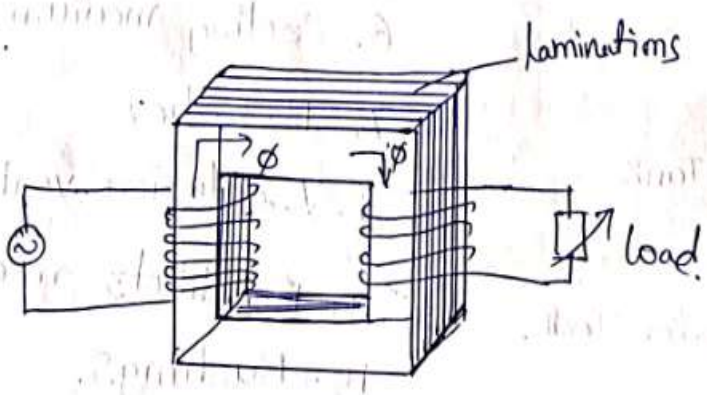

# Core Type Transformer

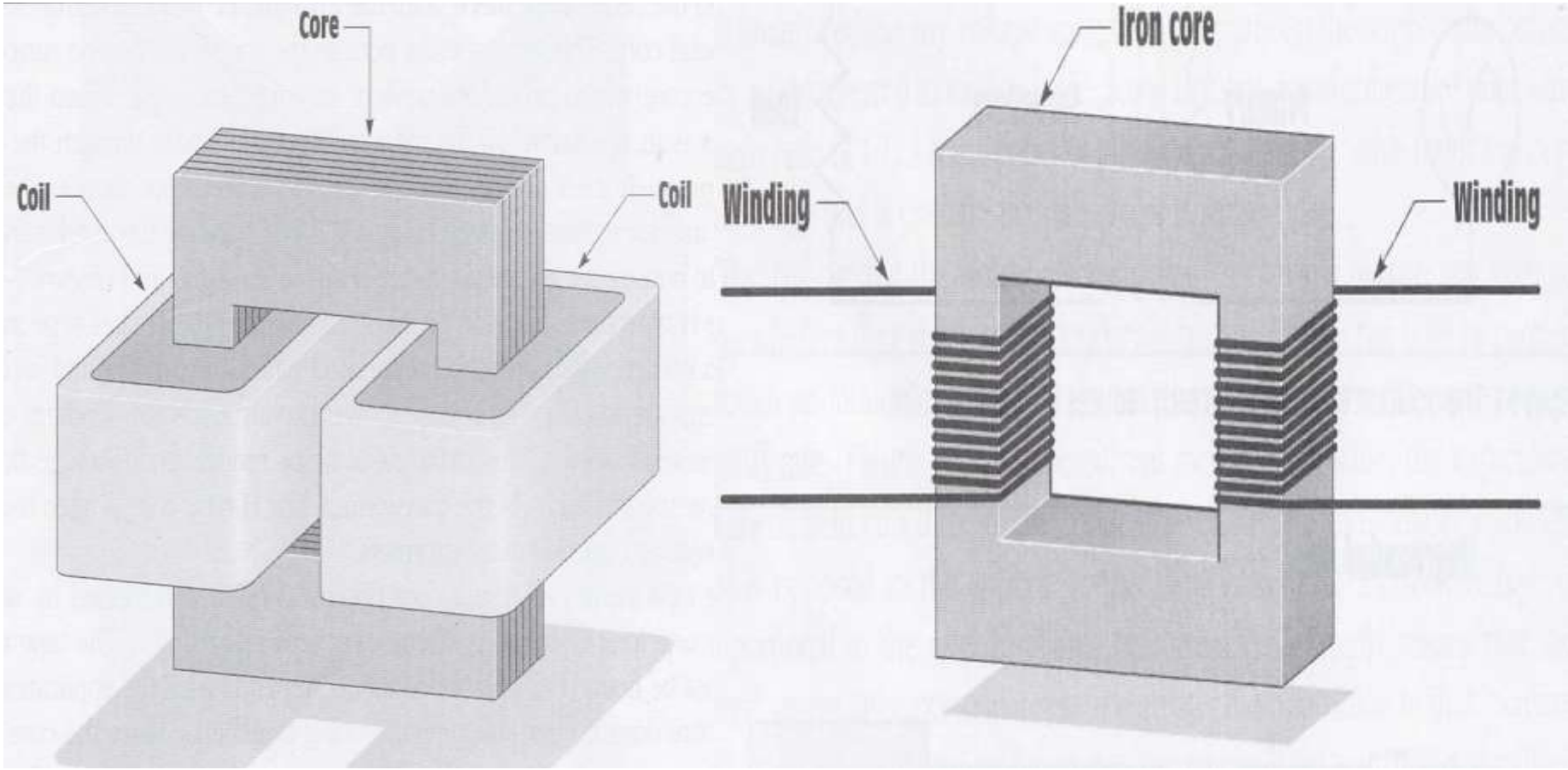

→ The laminations are pressed or punched out from the steel sheets, we can ~~desi~~ manufacture the core of Transforma

→ These laminations sheets are assemble as letter

E, I, L, U as

→ In this type of core, interleaving windings is used which reduces leakage fluxes.

(b) Shell type transformer :- In this shell type windings are surrounded by core of transformer.

→ It has double magnetic circuit.

→ It has a central limb and two outer limbs, as

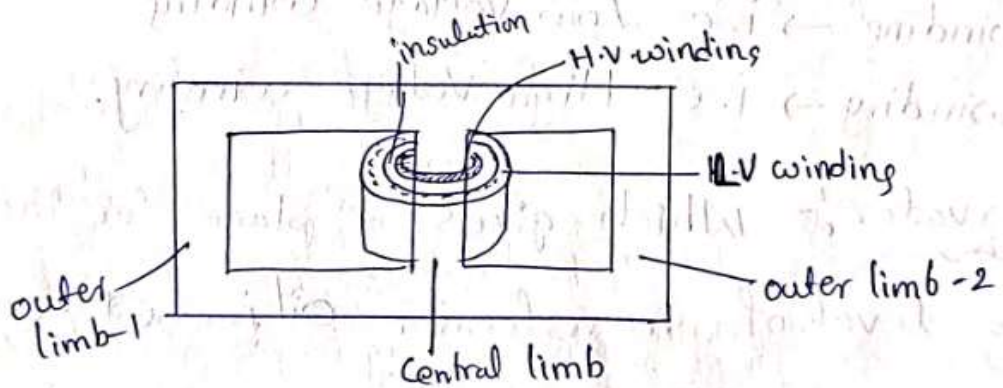


→ For construction of this type core, we use E & I shape lamination sheets.

→ It require less insulation for designing it

→ Cooling mechanism is easy.

# Shell Type Transformer

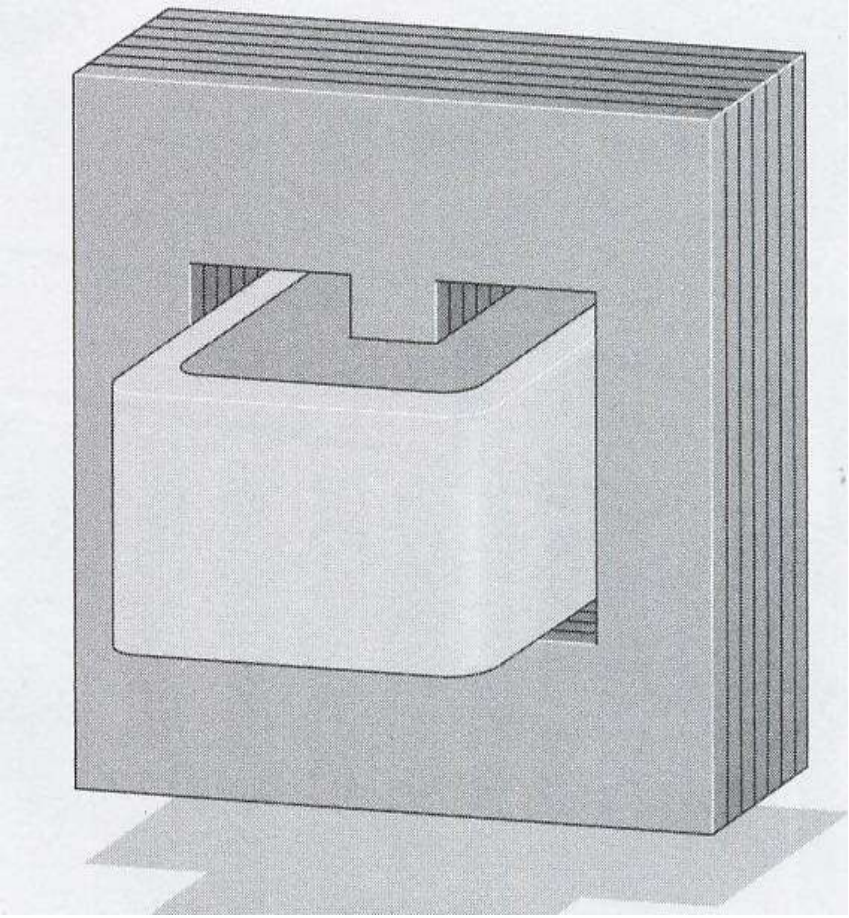

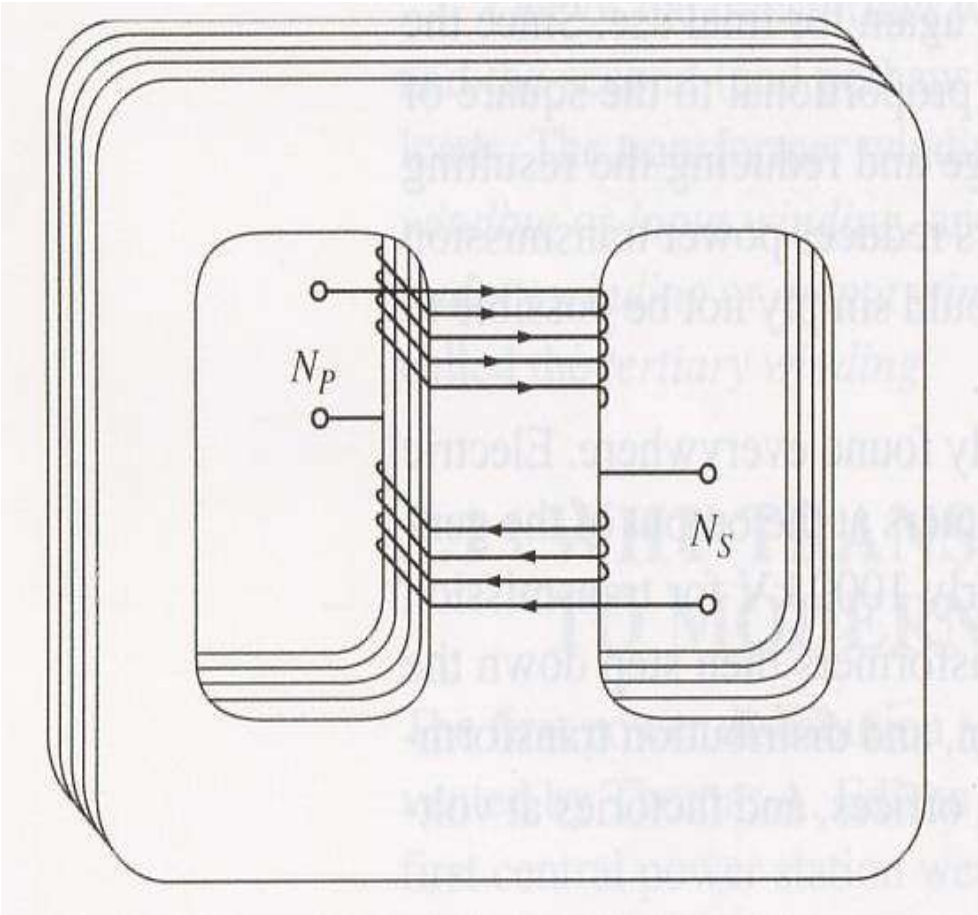

| Sr. No | Core Type Transformer | Shell Type Transformer |
|---|---|---|
| 1. | The core has only one window. | The core has two windows. |
| 2. | Winding encircles the core. | Core encircles the windings. |
| 3. | Cylindrical windings are used. | Sandwich type windings are used. |
| 4. | Easy to repair. | It is not so easy to repair. |
| 5. | Better cooling since more surface is exposed to the atmosphere. | Cooling is not very effective. |

# Cont…

- **Limb:** Limb is a part of core, which gives accommodation for winding and protect the winding for physical stress.
- **Yoke (or) Tank:** Yoke is part of transformer which protects transformer winding from physical stress and gives accommodation for transformer oil.
- **Windings:** we have two windings in transformer 1) primary winding: which is connected with supply 2) secondary winding: which is connected with load

# Cont…

- **Conservator:** which gives a place for increasing and decreasing levels of transformer oil i.e. cooling medium
- **Breather:** which is protects the transformer oil from all weather condition problems.
- **Buchholz relay:** The relay which rings the alaram when fault is occurred in transformer.

# Cont…

- **Bushings:** which provides insulation between winding terminals to the transformer tank.
- **Transformer oil:** The main function of transformer oil is to provide cooling to the windings and insulation between windings.
- **Explosinvent:** It is a valve for releasing oil from the tank when sudden explosion is occurs.

# Applications

- Step – up and Step – down Voltage
- Measurement of current in single and three phase system
- Measurement of voltage in single and three phase system
- Measurement of power
- Measurement of Energy

# Three Phase Induction Motor

# Introduction

- The induction motors are basically ac motors.
- They can operate on either single phase or three phase ac supply, however the single phase induction motors are suitable only for few applications.
- In almost 85% applications the three phase induction motors are preferred.
- Depending on the type of rotor, the induction motor are classified into two types, slip ring induction motors and squirrel cage induction motors.

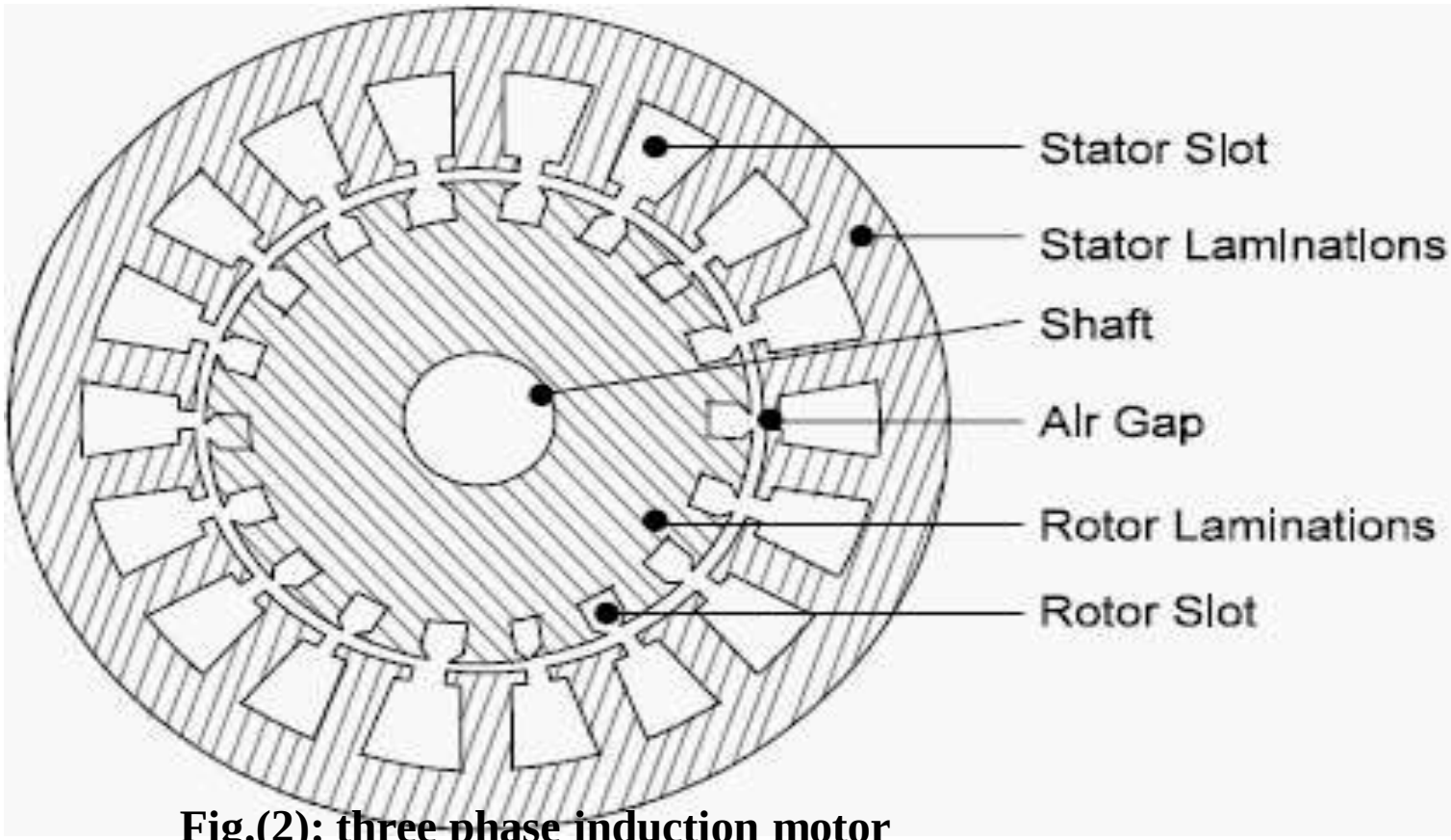


**Fig.(2): three phase induction motor**

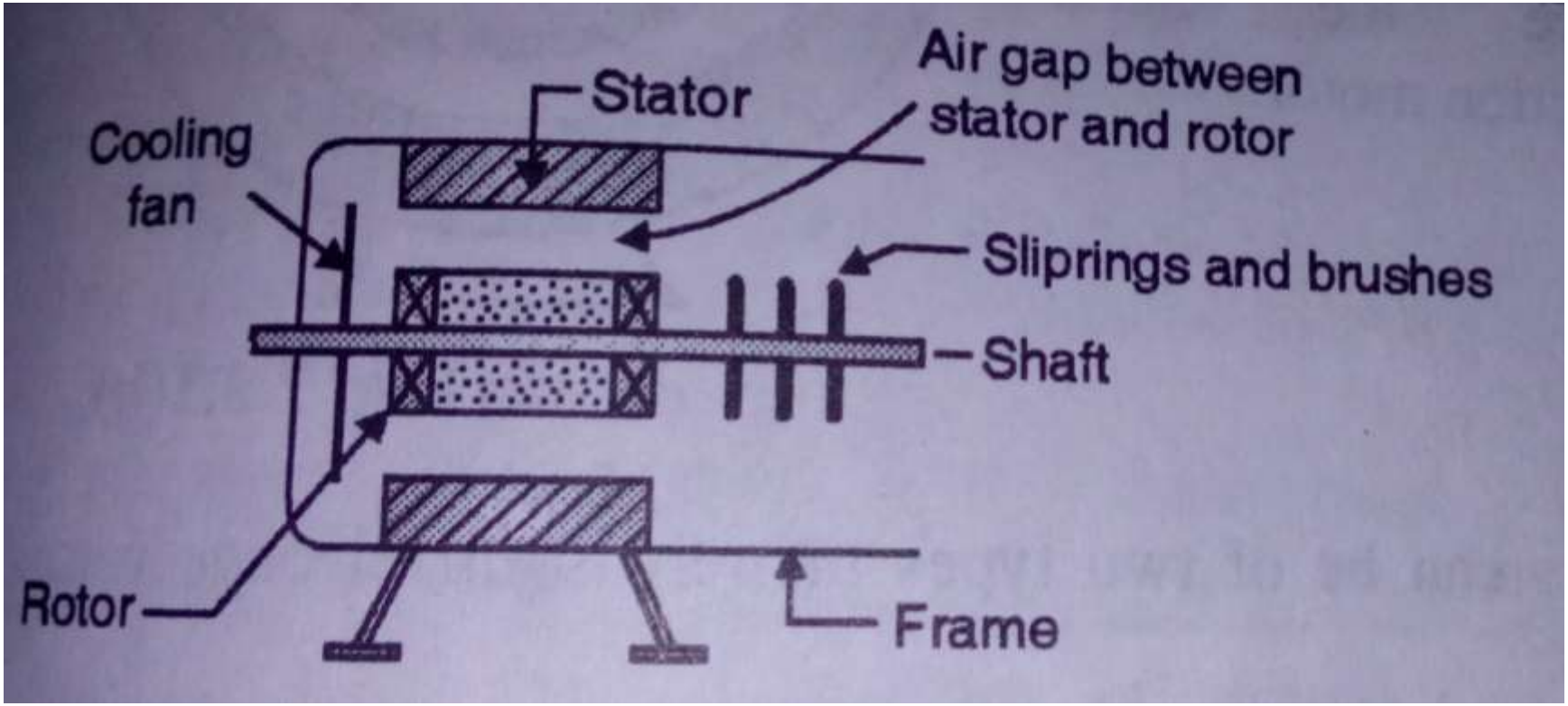


**Fig.(1): construction of three phase induction motor**

# Principle of Operation

- The three phase stator winding of induction motor is connected to the three ac supply.
- Due to ac voltage applied, current starts flowing in the stator conductors.
- Due to three phase stator current, a rotating magnetic field (RMF) of constant amplitude and rotating at a constant speed is set up in the air gap between stator and rotor.
- The rotor winding is not rotating. So rotating magnetic field cuts the stationary rotor conductors and induced emf in the rotor winding.
- The rotor induced voltage gives rise to currents.
- So rotor current will flow in such a direction that the rotor will experienced a force that accelerates it in same direction as that of RMF.

# Synchronous Speed ($N_s$)

- The synchronous speed is the speed at which the rotating magnetic field rotates.
- $N_s$ is dependent only on the stator frequency $f_1$ and number of poles P.

$$N_s = 120\ f_1 / P$$

# Slip (s)

- The difference between the synchronous speed (Ns) and the actual motor speed (N) is indicated by the slip “s”.

  $$\% \text{ slip} = (N_s - N)/N_s \times 100\ \%$$

- The actual speed N can be expressed in terms of s as,

  $$N = N_s\,(1-s)$$

- The value of slip will vary between 0 and 1 for motoring operation.

# Construction of Induction Motor

- An induction motor consists of two main parts:

1. Stator 2. Rotor

- The stationary frame called stator and the rotating armature called rotor.
- Fig.(1) shows the construction of a three phase induction motor.
- The function of various parts is as follows:

1. **Frame**: It provides the mechanical support to entire construction. It contains the stator winding.
2. **Air gap**: Air gap provides the space for the rotating magnetic field between stator and rotor.

3. **Fan**: The fan rotates with the rotor. Its function is to cool down the motor.
4. **Slip rings**: The rotor winding terminals are permanently connected to the slip rings. The slip rings are continuously in contact with three brushes which are pressed against slip rings. External connections from brushes are brought out.

- Similar to stator, the rotor drum is provided with slots.
- The stator can be a star connected or delta connected and connected to the 3 phase ac supply.
- The current flows through the rotor due to the principle of induction. Hence the name induction motor.

- **Advantages of induction motors over DC motors:**

1. Low maintenance requirement.
2. Ruggedness, smaller size and weight.
3. Low cost.
4. They can operate in dusty and explosive environment.
5. They can operate at much higher speed.
6. It can produce sufficient torque.
7. Speed control by using thyristors can give a wide range of speeds.

- **Disadvantages of induction motors:**

1. The efficiency of induction motors varies with speed.
2. They have low starting torque.
3. They have a lagging and low power factor.
4. Speed control by electrical methods is not easy.

- **Applications of induction motors:**

1. Fans
2. Pumps
3. Extruders
4. Conveyors
5. In food and chemical industries
6. Paper and sugar industries etc.
7. Chemical, textile, mines and traction etc.

# Three phase alternator

# Principle of Operation

- The operation of a synchronous generator is based on Faraday's law of electromagnetic induction, and in an ac synchronous generator the generation of emf's is by relative motion of conductors and magnetic flux.
- These machines can be used as either motors or generators but their predominant use is in generation.

There are a number of sources of energy used to turn the turbines:-

(a) Gas (b) Steam
(c) Combined cycle (d) Nuclear
(e) Hydro (f) Wind
(g) Wave (h) Photovoltaic

# Principle of Operation

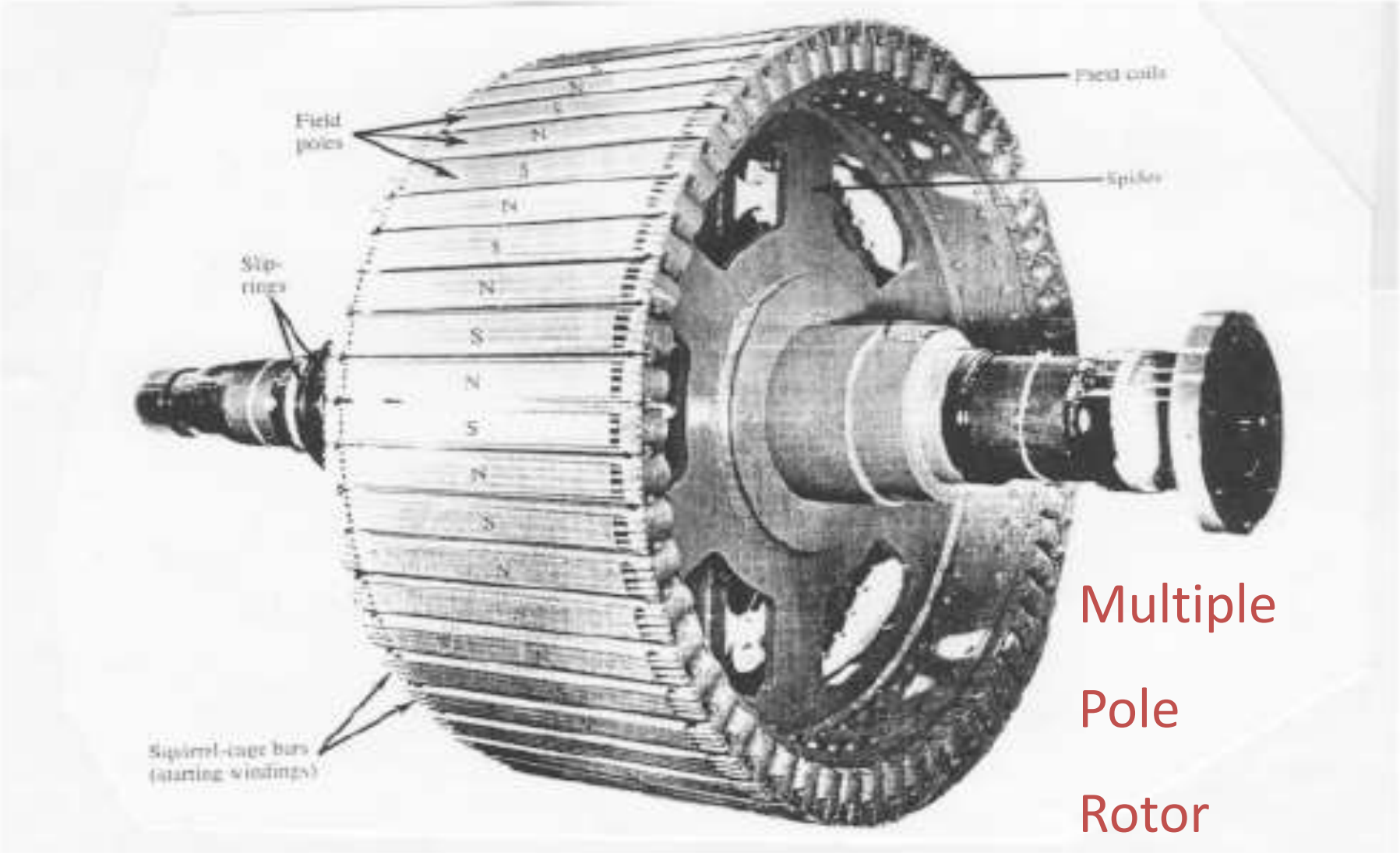


Multiple Pole Rotor

# Principle of Operation

- In constructing a synchronous machine a point to note is that the stator is fixed and the poles rotate.

- There are two categories of Synchronous machines:

(a) those with salient or projecting poles

(b) those with cylindrical rotors

**2-pole Cylindrical Rotor**

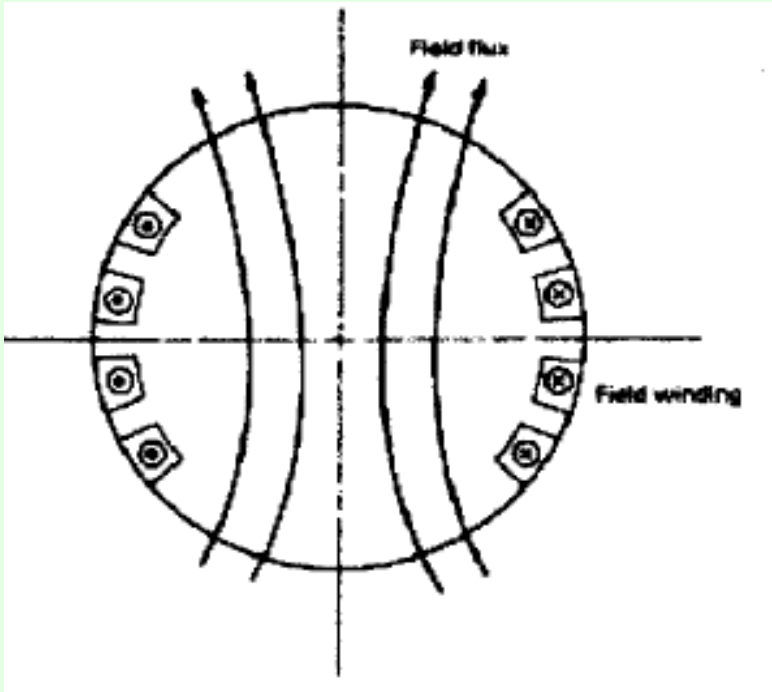


**A Cylindrical Rotor**

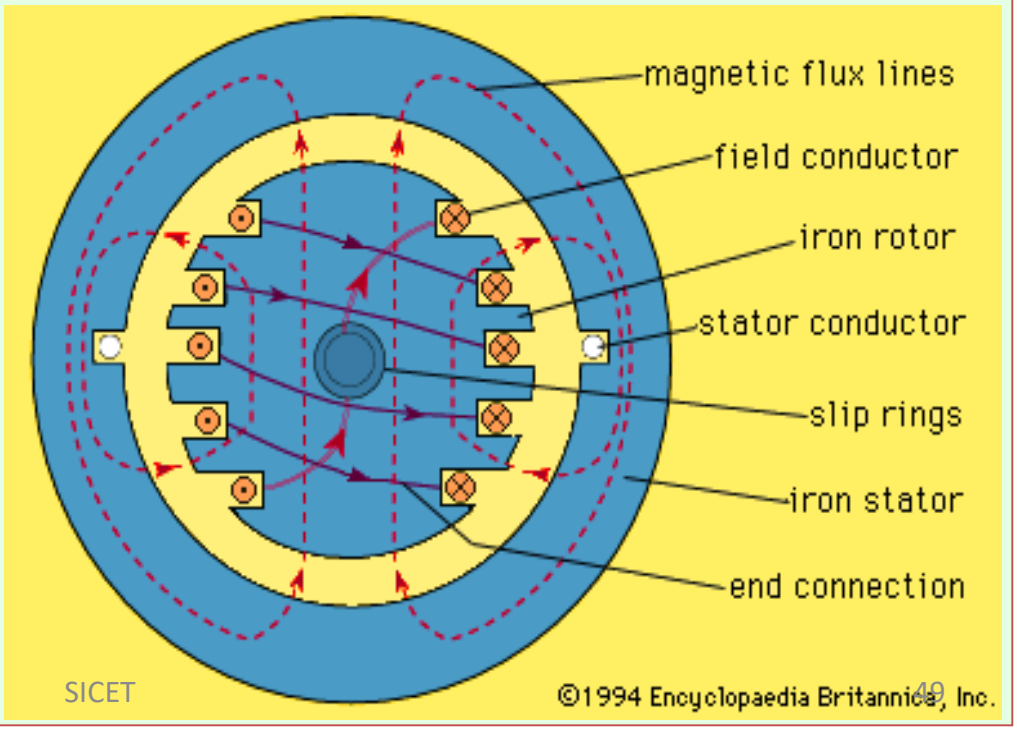

# Principle of Operation

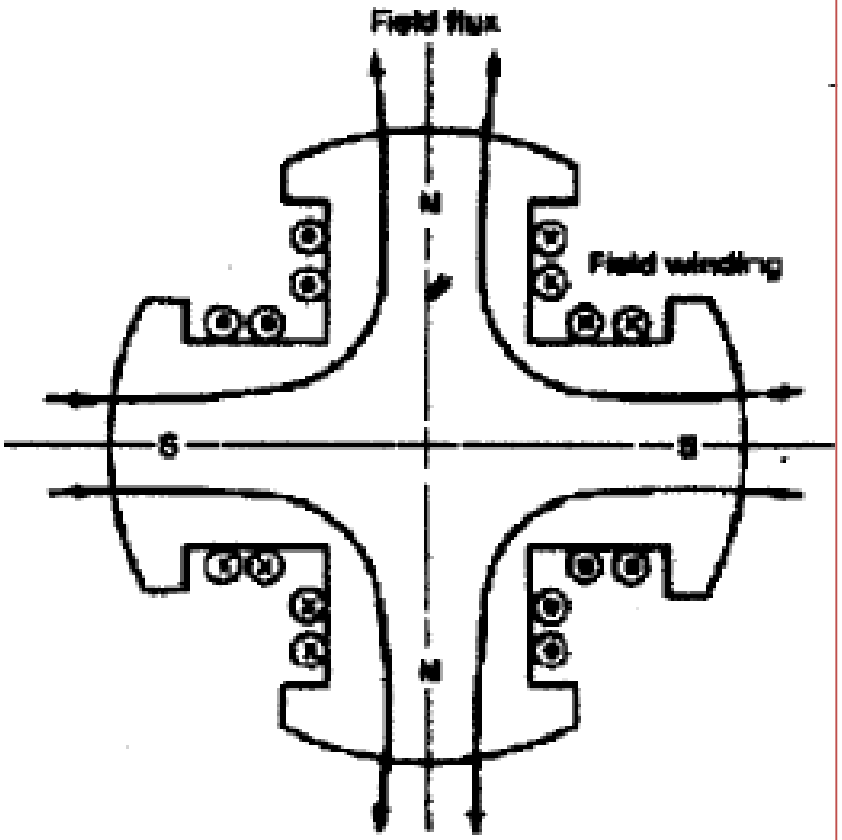


4-Pole Salient Rotor

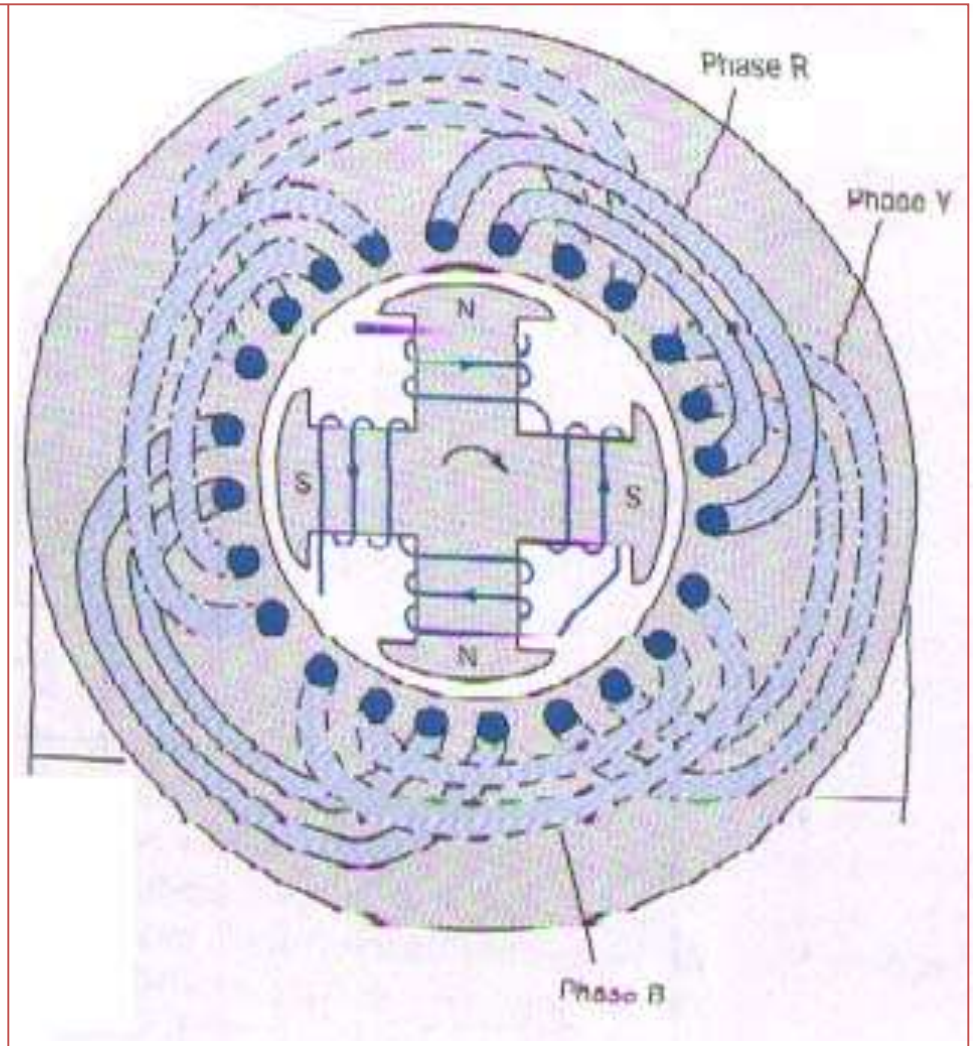


A Salient Pole Rotor

# Principle of Operation

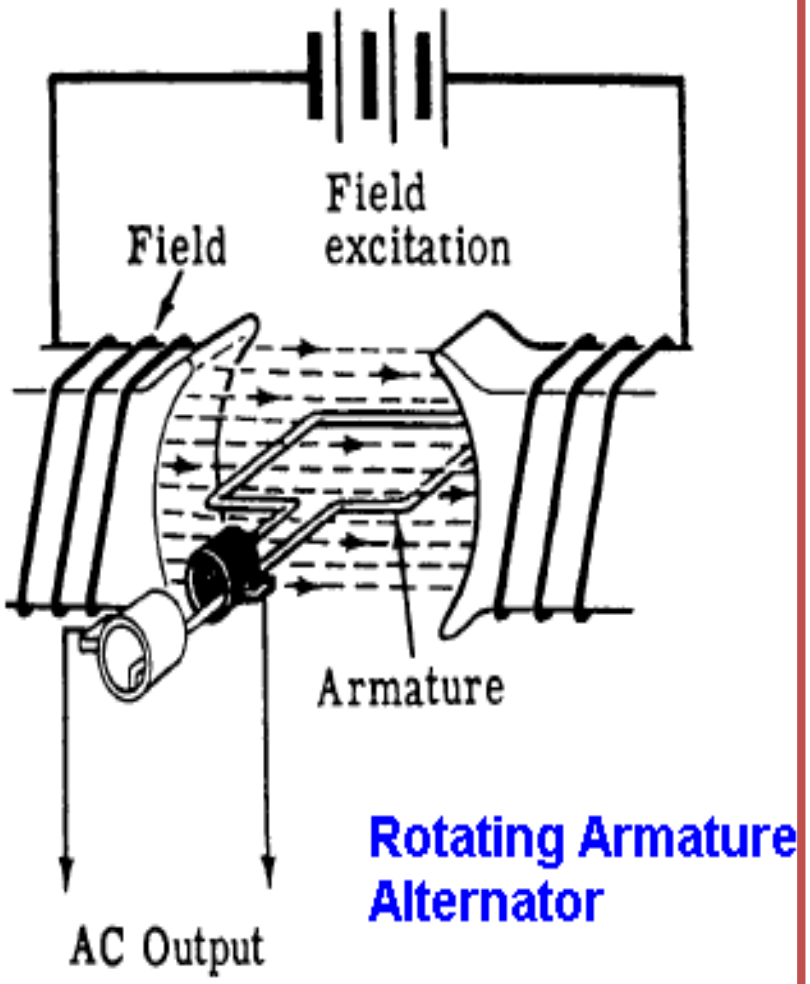


Its characteristic feature is that the armature rotates through a stationary magnetic field, and the generated AC is brought to the load by means of slip rings and brushes.

The revolving-armature alternator is found only in alternators of small power rating and is not generally used. This is because a rotating armature requires slip rings and brushes to conduct the current from the armature to the load.

# Principle of Operation

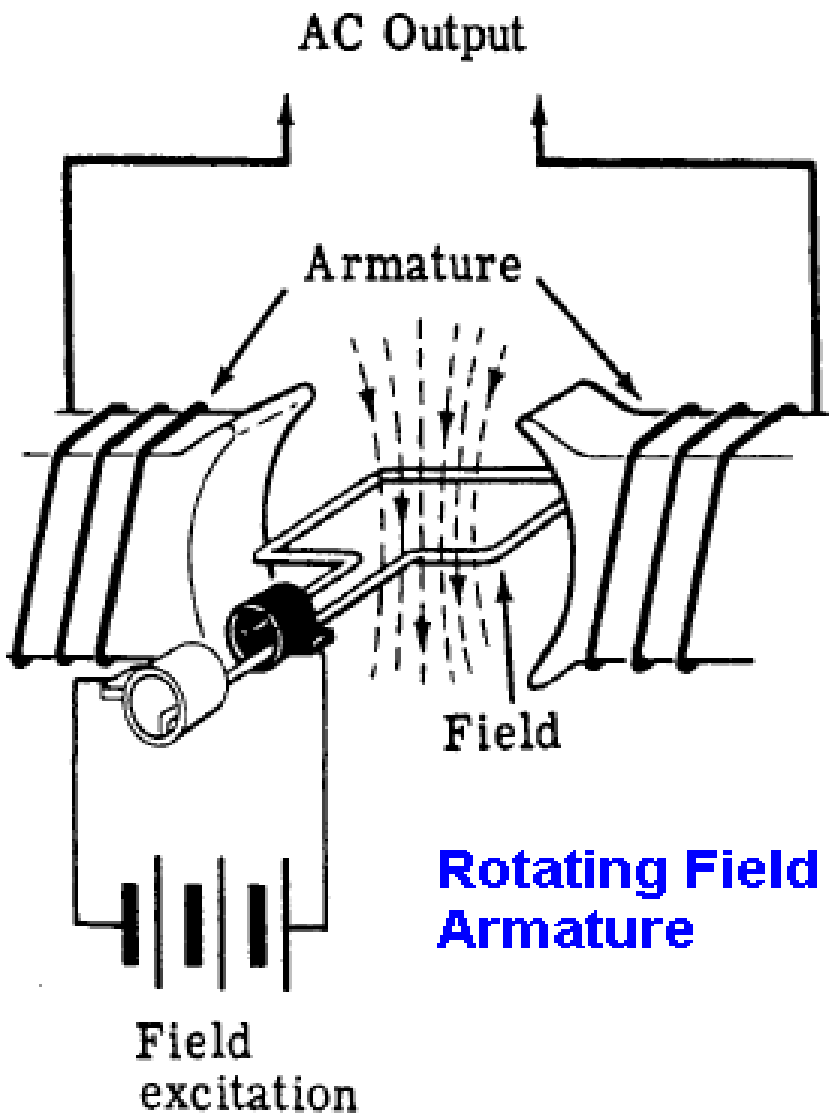


The revolving-field type alternator has a stationary armature and a rotating magnetic field.

The generated voltage can be connected directly to the load without having to pass across the slip rings and brushes.

The voltage applied to generate the rotating field is a small DC voltage (called a “field excitation” voltage)

## Construction of Synchronous Generator or Alternator

As alternator consists of two main parts viz.

- **Stator** – The stator is the stationary part of the alternator. It carries the armature winding in which the voltage is generated. The output of the alternator is taken form the stator.
- **Rotor** – The rotor is the rotating part of the alternator. The rotor produces the main field flux.

### Stator

The stator of the alternator includes several parts, viz. the frame, stator core, stator or armature windings, and cooling arrangement.

- The stator frame may be made up of cast iron for small-size machines and of welded steel for large-size machines.
- The stator core is assembled with high-grade silicon content steel laminations. These silicon steel laminations reduce the hysteresis and eddy-current losses in the stator core.
- The slots are cut on the inner periphery of the stator core. A 3-phase armature winding is put in these slots.
- The armature winding of the alternator is star connected. The winding of each phase is distributed over several slots. When current flows through the distributed armature winding, it produces an essential sinusoidal space distribution of EMF.

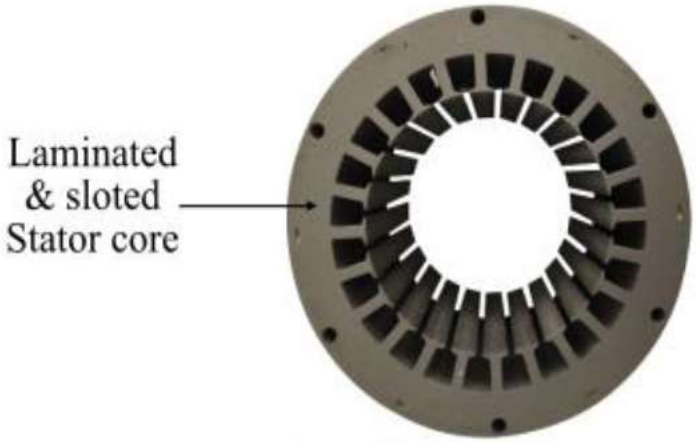


Fig. - Stator of Alternator

## Rotor

The rotor of the alternator carries the field winding which is supplied with direct current through two slip rings by a separate DC source (also called exciter). The exciter is generally a small DC shunt generator mounted on the shaft of the alternator. For the alternator, there are two types of rotor constructions are used viz. (i)salient-pole type

*(ii)*cylindrical rotor type.

## Salient Pole Rotor

The term *salient means projecting*. Hence, a *salient pole rotor* consists of poles projecting out from the surface of the rotor core. This whole arrangement is fixed to the shaft of the alternator as shown in the figure. The individual field pole windings are connected in series such that when the field winding is energised by the DC exciter, the adjacent poles have opposite polarities.

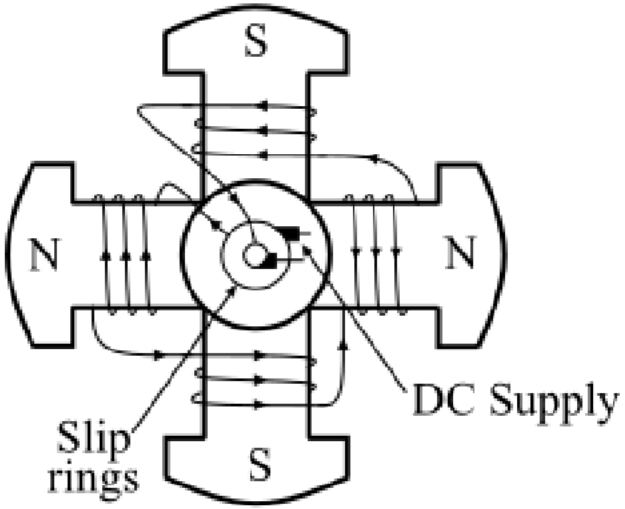


Fig. - Salient Pole Rotor

The salient pole type rotor is used in the low and medium speed (from 120 to 400 RPM) alternators such as those driven by the diesel engines or water turbines because of the following reasons –

- The construction of salient pole type rotor cannot be made strong enough to withstand the mechanical stresses to which they may be subjected at higher speed.
- If the salient field pole type rotor is driven at high speed, then it would cause windage loss and would tend to produce noise.

Low speed rotors of the alternators possess a large diameter to provide the necessary space for the poles. As a result, the salient pole type rotors have large diameter and short axial length.

**Cylindrical Rotor**

The cylindrical rotors are made from solid forgings of high-grade nickel-chrome-molybdenum steel.

- The construction of the cylindrical rotor is such that there are no-physical poles to be seen as in the salient pole rotor.
- In about two-third of the outer periphery of the cylindrical rotor, slots are cut at regular intervals and parallel to the rotor shaft.
- The field windings are placed in these slots and are excited by DC supply. The field winding is of *distributed type*.
- The unslotted portion of the rotor forms the pole faces.
- It is clear from the figure of the cylindrical rotor that the poles formed are non-salient, i.e., they do not project out from the rotor surface.

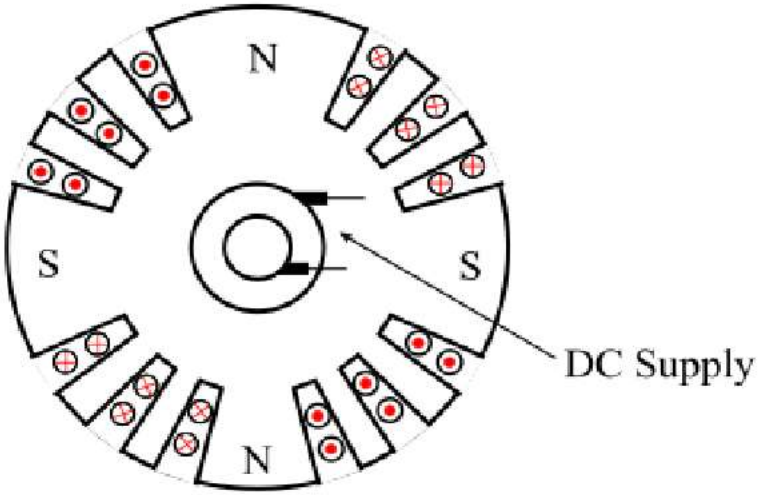


Fig. - Cylindrical Rotor

# Perminate Magnet Moving Coil instrument(PMMC)

# Continued…

1. **PMMC Instruments:**

- They are also known as d’Arsonval instruments.
- These instruments works on the electromagnetic effect of current.
- A permanent magnet used to produce magnetic flux and coil that carries the current to be measures moves in this field.

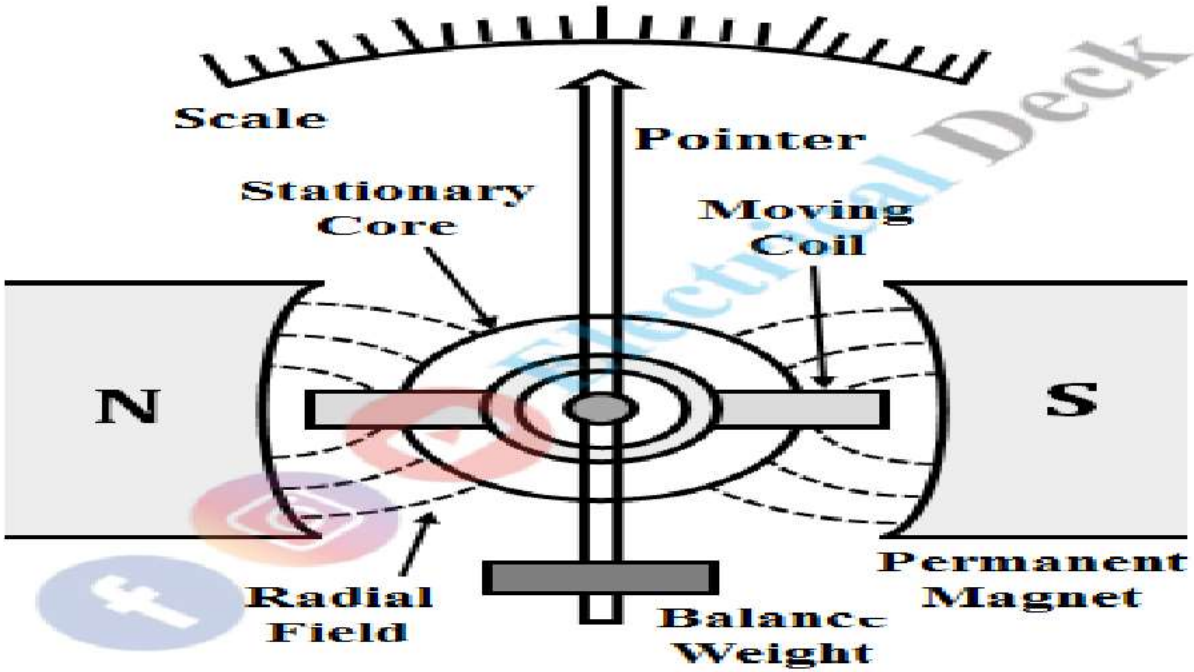
Scale
Pointer
Stationary Core
Moving Coil
N
S
Radial Field
Balance Weight
Permanent Magnet

# Continued…

- **Working principle:**

➢ When a current carrying conductor is placed in a magnetic field, it experiences a force. It is given by expression,

$$F = BIL$$

Where F = Force in Newton,

B = Flux density is tesla,

I = Current is ampere,

L = Length of conductor in meter.

➢ The current I which is to be measured is passed through the moving coil and experiences a force which is directly proportional to this current.

➢ Due to this force the coil moves and the pointer attached to it will also move.

➢ The angle through which the pointer moves is proportional to current I.

## Working principle of Permanent Magnet Moving Coil or PMMC Instrument

Whenever a current caring conductor is located within a magnetic field, then it experiences a force that is perpendicular to the current & the field. Based on the rule of "Fleming left hand", if the thumbnail of the left hand, middle, and forefinger are at 90 degrees with each other. After that the magnetic field will be in the forefinger, the flow of current will be across the middle finger and finally, the force will be through the thumb finger. Once the current flow within the coil on the aluminium former, the magnetic field can be generated in the tesla coil in proportion to the current flow.

# Continued…

- **Construction of PMMC instrument:**

➢ A coil of thin wire is mounted on an aluminum frame (spindle) positioned between the poles of a U shaped permanent magnet which is made up of magnetic alloys like alnico.

➢ The coil is pivoted on the jewelled bearing and thus the coil is free to rotate. The current is fed to the coil through spiral springs which are two in numbers.

➢ The coil which carries a current, which is to be measured, moves in a strong magnetic field produced by a permanent magnet and a pointer is attached to the spindle which shows the measured value.

# Continued…

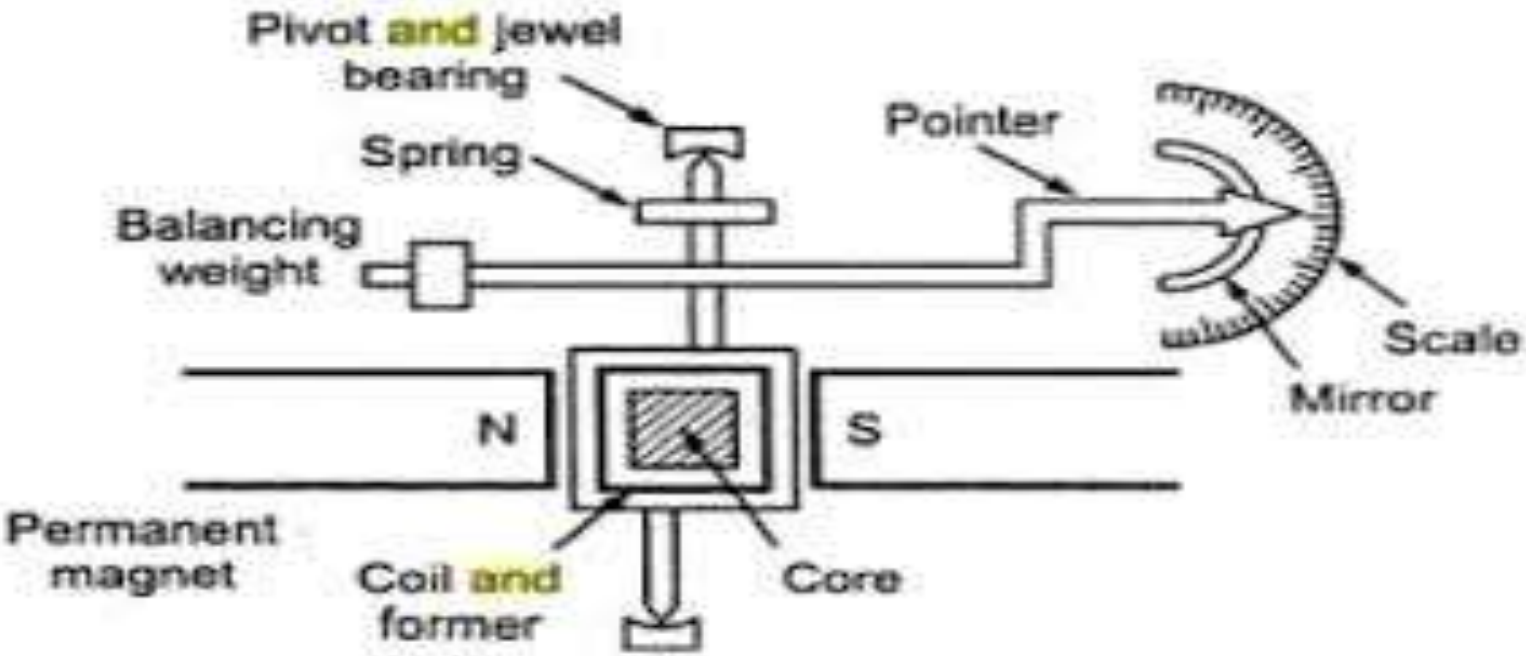


**Fig.(1): construction of PMMC instrument**

# Continued…

- **Deflecting Torque:**

➢ It can be proved that the expression for the deflecting torque is given by,

$$T_d = G \times I$$

where G = constant

I = Current through the moving coil

- **Controlling Torque:**

➢ The controlling torque is given by,

$$T_c = C.\ \theta$$

where C = Control spring constant in N-m/rad

$\theta$ = Deflection of coil from zero position

# Continued…

- For steady state, the controlling torque is equal to the deflection torque

$$\therefore T_c = T_d$$

$$\text{i.e. } C\theta = GI$$

$$\therefore \theta \propto I$$

- Thus deflection of the pointer is proportional to current passed through the coil.

# Continued…

- **Advantages of PMMC Instruments:**

1. The PMMC consumes less power and has great accuracy.
2. It has uniformly divided scale and can cover arc of 270 degree.
3. The PMMC has a high torque to weight ratio.
4. It can be modified as ammeter or voltmeter with suitable resistance.
5. It has efficient damping characteristics and is not affected by stray magnetic field.
6. It produces no losses due to hysteresis.

# Continued…

- **Disadvantages of PMMC Instruments:**

1. The moving coil instrument can only be used on D.C supply as the reversal of current produces reversal of torque on the coil.
2. It’s very delicate and sometimes uses ac circuit with a rectifier.
3. It’s costly as compared to moving coil iron instruments.
4. It may show error due to loss of magnetism of permanent magnet.

# Applications

- **Applications:**

**(1)In the measurement of direct currents and voltages.**

**(2) In d.c. galvanometers to detect small currents.**

**(3) In ballistic galvanometers used mainly for measuring changes of magnetic flux linkages**

# Moving Iron (MI) instruments

- Where ruggedness is more important than high degree of accuracy, moving iron instruments are used.

- **Types of moving iron instruments:**

1. Attraction type
2. Repulsion type

# Continued…

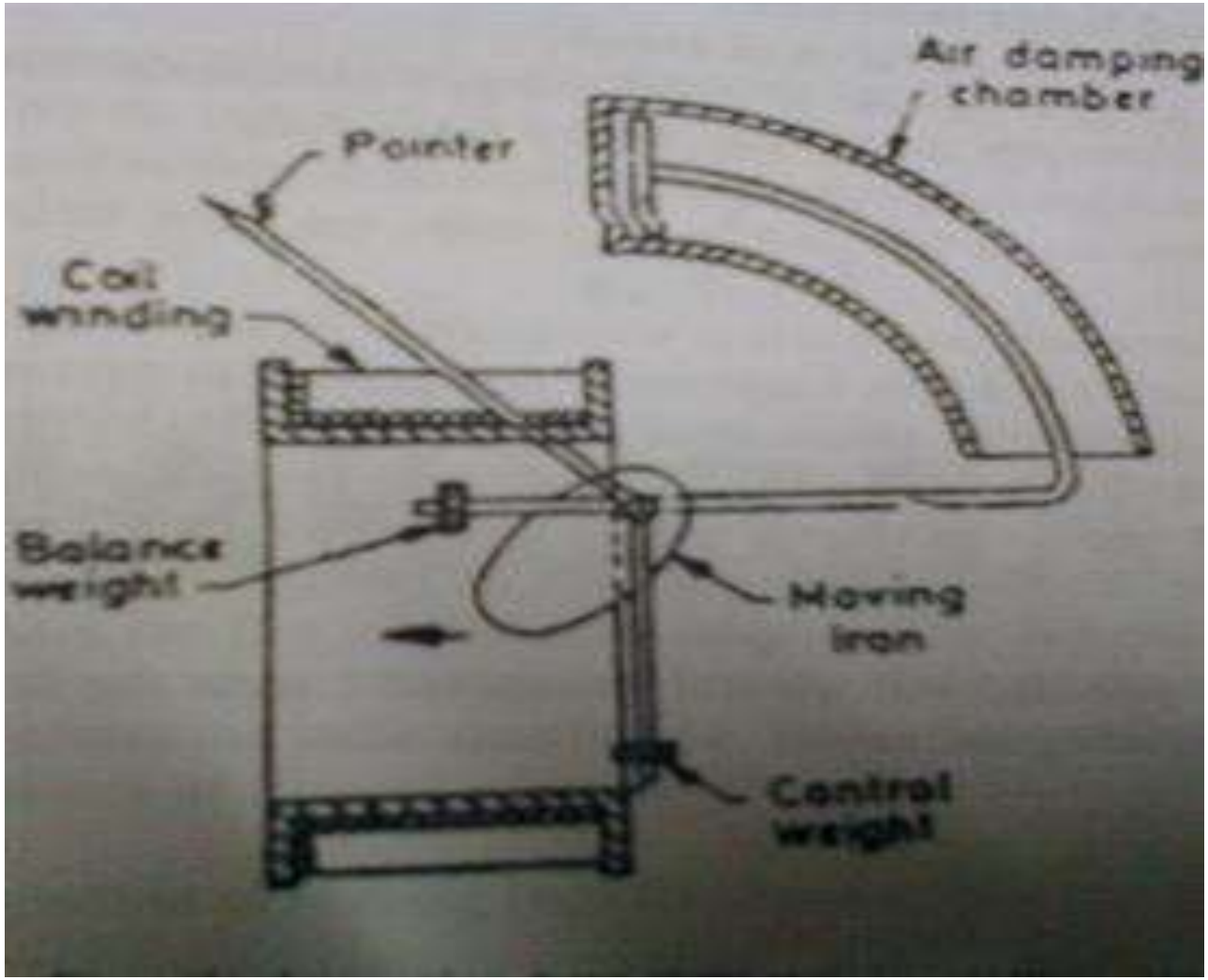


**Fig.(1): attraction type moving instrument**

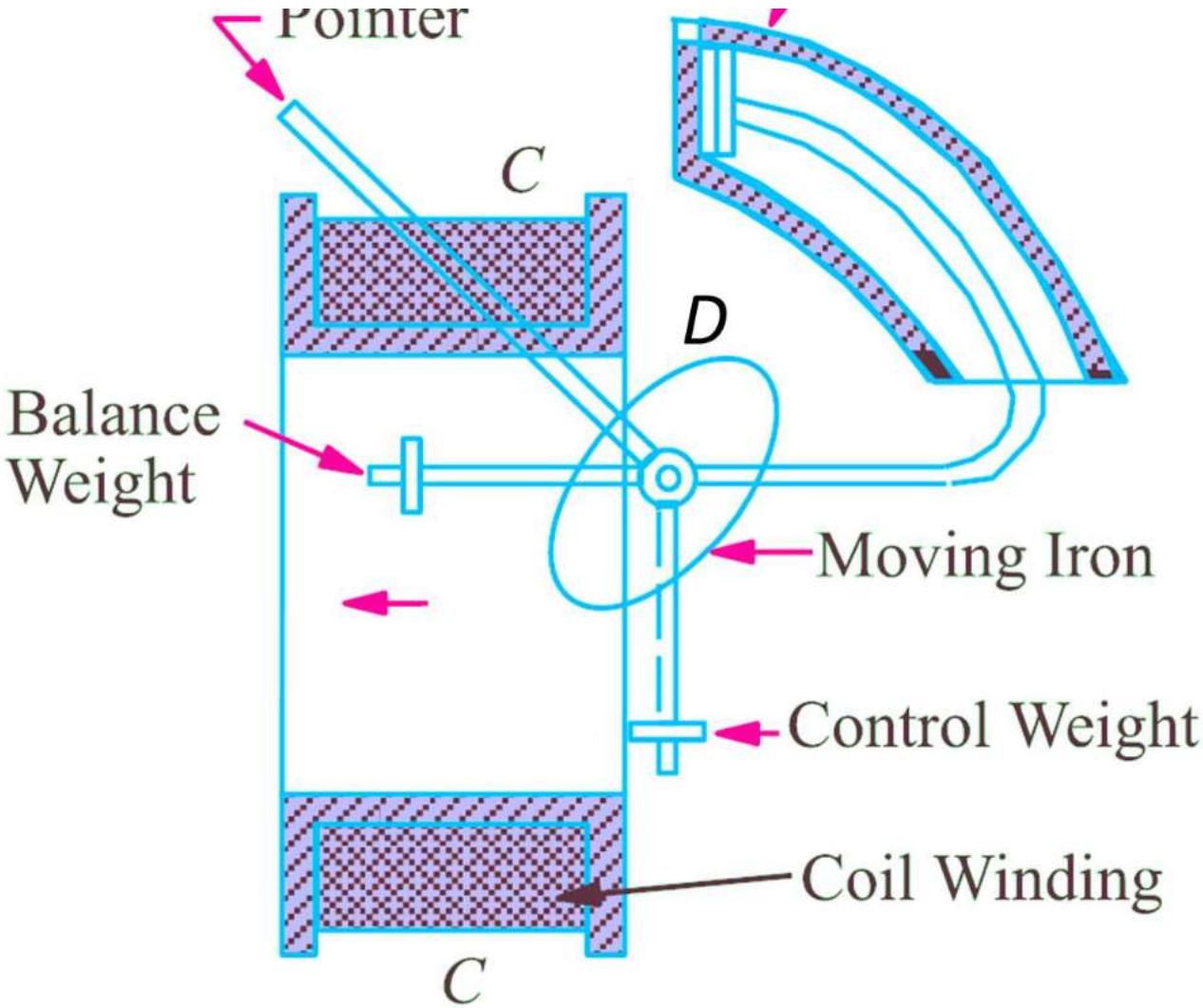
Pointer
C
D
Balance
Weight
Moving Iron
Control Weight
Coil Winding
C

# Continued…

1. **Attraction type moving iron instrument:**

- Construction of the attraction type moving iron instrument is as shown in the given figure (1).
- The moving iron, i.e. the disc of soft iron, is eccentrically mounted. Coil is situated around the disc. When the coil is excited it produces magnetic field.
- Due to magnetic field the moving iron moves from the weaker field outside the coil to the stronger field inside the coil. Thus moving iron gets attracted inwards and thus the name attraction type.

# Continued…

- The controlling torque is provided by the balance weights attached to the moving iron. Spring also can be used to provide controlling torque.
- Damping is provided by air friction in which aluminum piston is attached to the moving system and moves in a closed air damping chamber.

# Repulsion type MI instrument

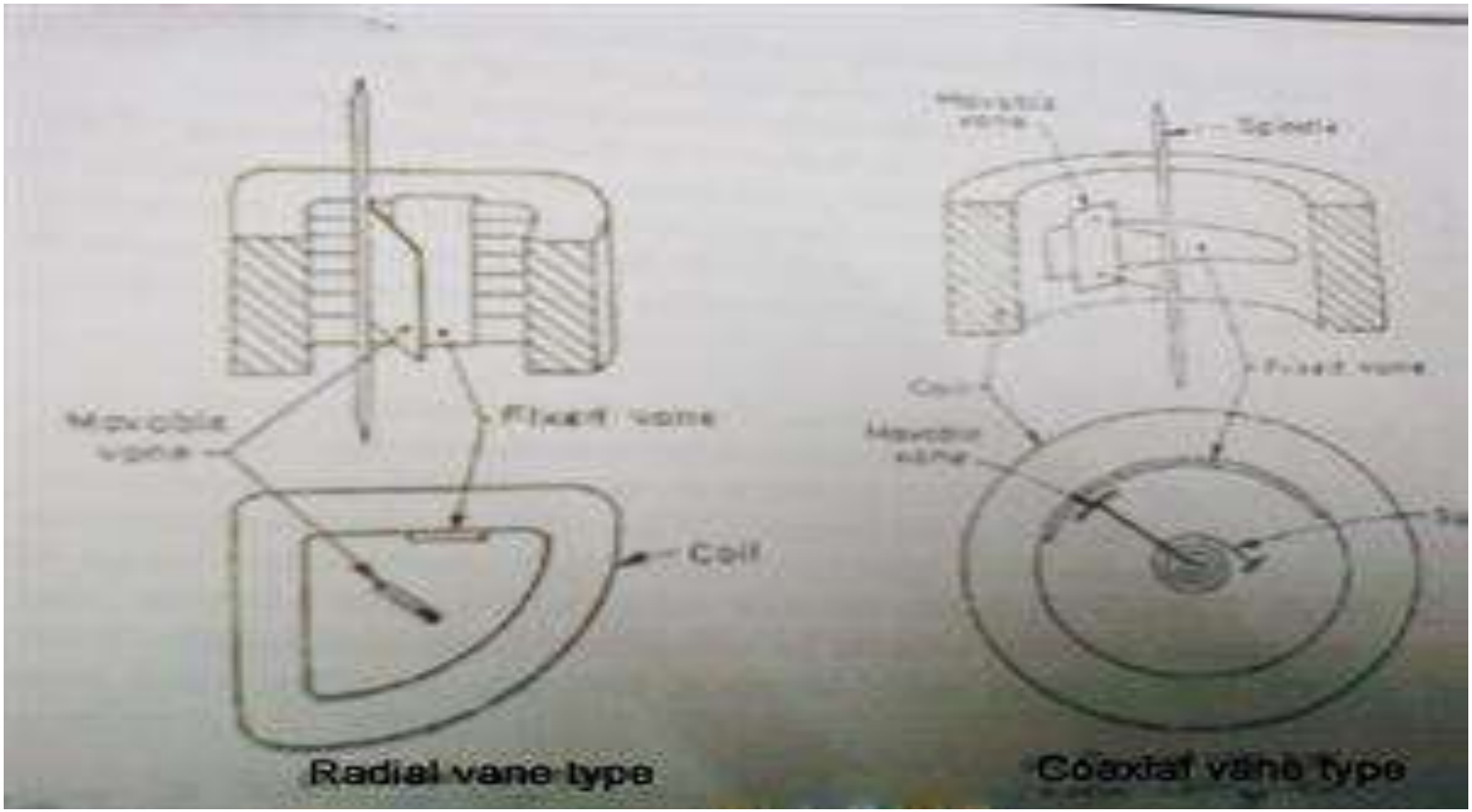


**Fig.(2):Repulsion type Moving Iron Instrument**

# Continued…

## 2. Repulsion type moving iron instrument:

- In these type of instruments there two vanes present inside the coil in which one is fixed while other is movable. These both vanes gets similarly magnetized when coil is excited. Thus there is a force of repulsion between both vanes causing movement in movable vane. There are further two different designs of repulsion type moving iron instruments.
  **i. Radial vane type:**
- In radial vane type radial strips of iron are used as moving vanes. The fixed vane is attached to the coil and moving is attached to the moving spindle.

# Continued…

**ii. Coaxial vane type:**

- In coaxial vane type the fixed as well as moving vanes are the sections of coaxial cylinders as shown in above figure.

  The controlling torque is provided by the springs or balancing weights (in vertically mounted instrument). The damping is provided by air friction damping same as in attraction type moving iron instruments.

# Continued…

- Advantages of Moving iron Instruments:

1. Suitable of a.c. as well as d.c. measurements.
2. Good accuracy.
3. Cheaper in cost as compared to permanents magnet moving coil instruments.
4. The instrument has high torque to weight ratio.
5. The instrument can be used for low frequency measurement also.

# Continued…

- Disadvantages of Moving iron instruments:

1. Power consumed by the instrument is high as compared to that of the permanent magnet moving coil instrument.
2. The scale is non-uniform.
3. Due to the presence of iron part in the operating system, error due to the hysteresis effect is introduced. To reduce this effect nickel iron alloys are used.

# applications

- Applications:

1. Heavy current moving-iron Ammeters.
2. Moving iron voltmeters
3. Moving iron power factor meters
4. Moving iron synchroscopes

# Wheatstone bridge

Wheatstone bridge is a very important device used in the measurement of medium resistances .A Wheatstone bridge has been in use longer than almost, any electrical measuring instrument. It is still an accurate and reliable instrument and is extensively used in industry. Wheatstone bridge is an instrument for making comparison measurements and operates upon a null indication principle. This means the indication is independent of the calibration of the null indicating instrument or any of its characteristics. For this reason, very high degrees of accuracy can be achieved using Wheatstone bridge. The accuracy of 0.1% is quite common with a Wheatstone bridge as opposed to accuracies of 3% to 5% with the ordinary ohmmeter for measurement of medium resistances.

# Cont…

The figure below shows the basic circuit of a Wheatstone bridge. It has four resistive arms, consisting of resistances P, Q R and S together with a source of emf (a battery) and a null detector, usually a galvanometer G or other sensitive current meter. The current through the galvanometer depends on the potential difference between points c and d. The bridge is said to be balanced when there is no current through the galvanometer or when the potential difference across galvanometer is zero. This occurs when the voltage from point b to point a equals the voltage from point d to point b or by referring to the other battery terminal, when the voltage frompoint d to point c equals the voltage from point b to point c. Forbalanced condition, we can write, $I1\ P = I2\ R$

# Cont…

- Cont…

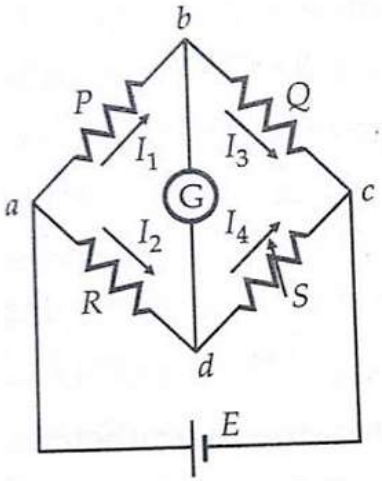


For the galvanometer current to be zero,the following conditions also exist:

$$I_1 = I_3 = \frac{E}{P+Q}$$

$$I_2 = I_4 = \frac{E}{R+S}$$

# Cont…

- Cont..

Where E=emf of the battery

Combining above three equations we get ,

$$\frac{P}{P+Q} = \frac{R}{R+S}$$

from which **Q.R = P.S ---->(4)**

Equation-4 is the well-known expression for the balance of **Wheatstone bridge**. If three of theresistances are known, the fourth may be determined from equation-4 and we obtain

$$R = S*(P/Q)$$

where R is the unknown resistance, S is called the 'standard arm' of the bridge and P and Q are called the 'ratio arms'.